BLOCK

Finish Specifier

LOUNGE

25633 - Three-Seater, with Right Arm

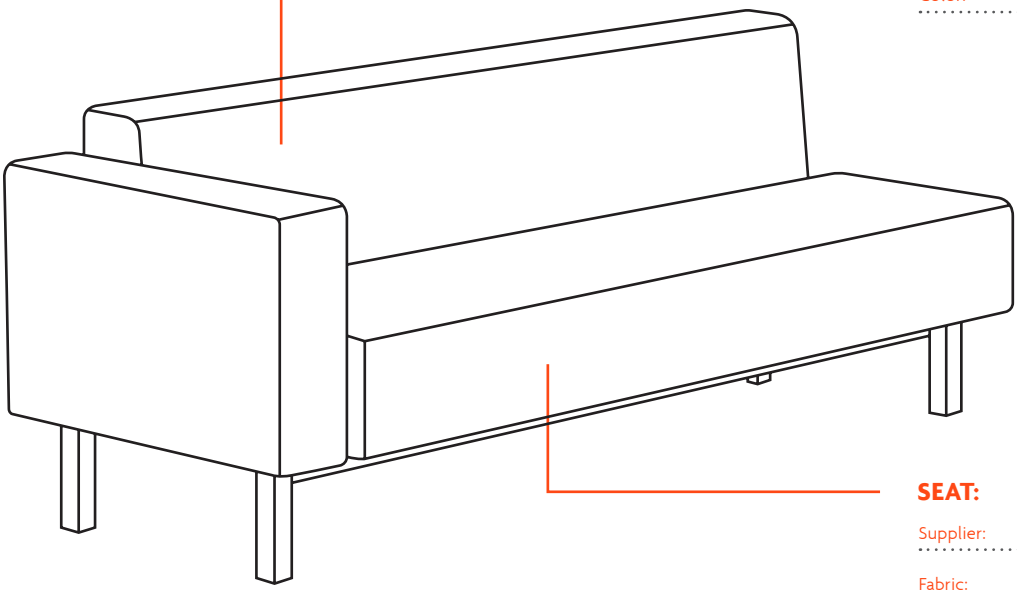

BACK:

Supplier: .....

Fabric: .....

Color: .....

SEAT:

Supplier: .....

Fabric: .....

Color: .....

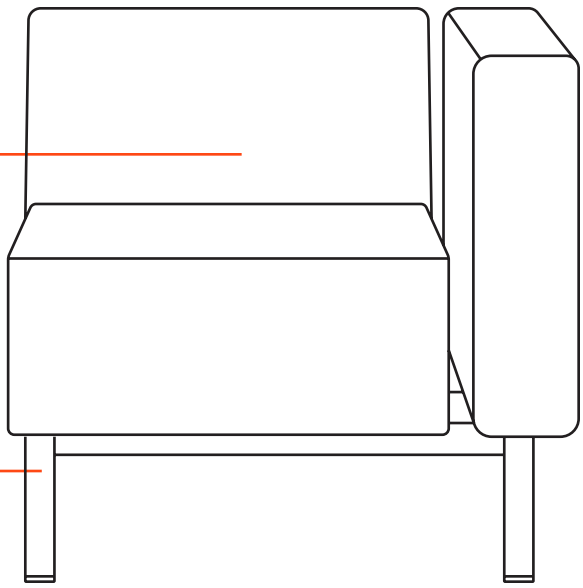

ARM:

Supplier: .....

Fabric: .....

Color: .....

LEGS:

Finish: .....

borgo®

Borgo Contract Seating
324 Carlingview Drive Toronto, Ontario M9W 5G5
www.borgo.com | **sales@borgo.com** | **T. 416 679.8133** | **Toll Free. 1 888 312.6746**

© Borgo Contract Seating - June 29, 2023 12:48 PM

BLOCK

Finish Specifier

LOUNGE

25633 - Three-Seater, with Right Arm

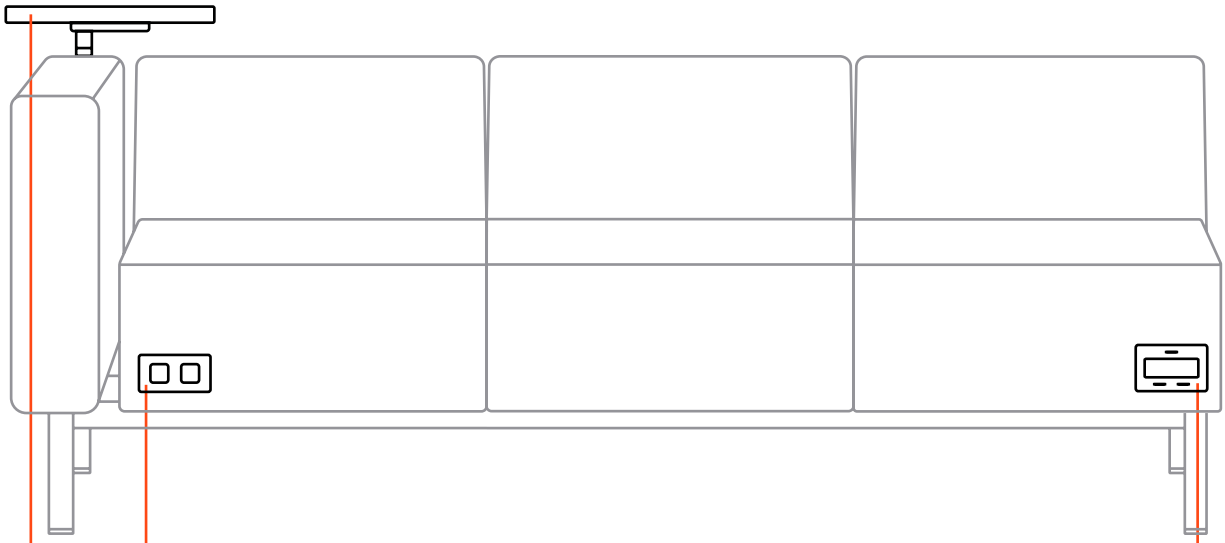

POWER:

Options: Choose an Option

PULITO:

Options: Choose an Option

SWIVEL TABLET:

Options: Choose an Option

borgo®

Borgo Contract Seating
324 Carlingview Drive Toronto, Ontario M9W 5G5
www.borgo.com | sales@borgo.com | T. 416 679.8133 | Toll Free. 1 888 312.6746

© Borgo Contract Seating - June 29, 2023 12:48 PM